DISP. CODE	G MAX
036	138.0 [5.43]
046	140.3 [5.52]
057	142.5 [5.61]
073	146.0 [5.75]
088	149.1 [5.87]
101	151.8 [5.98]
114	154.5 [6.08]
137	159.4 [6.28]
182	169.0 [6.66]
227	178.4 [7.02]

REV	DESCRIPTION	BY	CHK	DATE	ECN
A	ENGINEERING RELEASE	SMM		06-09-04	48257
B	-1)<8C> WAS 131.4\[5.17] MAX -2)<7B> WAS 102.4\[4.03] MAX	SRM		04-07-04	ECR8166
C	-1) <8A> NOTE 2 WAS MOUNTING FLANGE : "K :-....." -2) <8A> NOTE 3 WAS CASE DRAIN : 0...	TTV	CSG	04-08-16	0070053

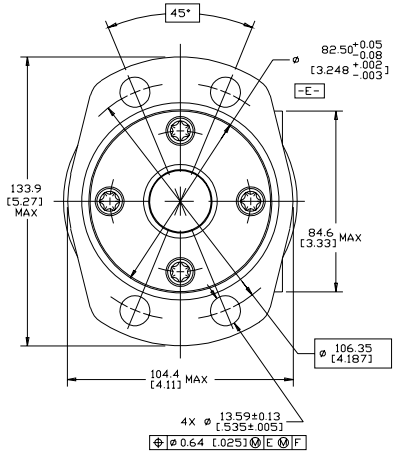

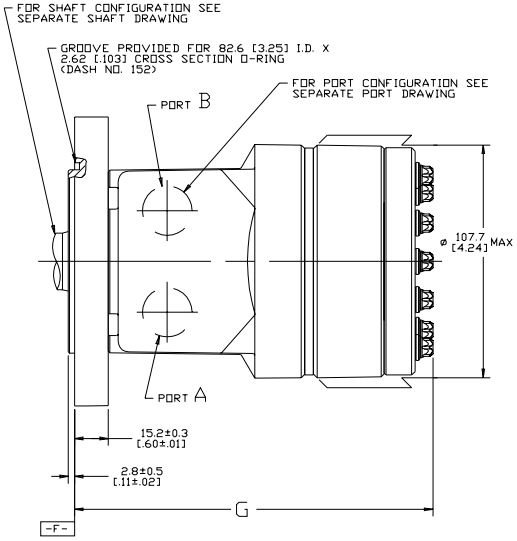

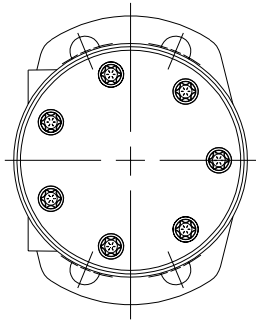

NOTE

1 ROTATION:
STANDARD; WHEN FACING SHAFT END OF MOTOR, SHAFT TO ROTATE CLOCKWISE WHEN PORT "A" IS PRESSURIZED. COUNTERCLOCKWISE WHEN PORT "B" IS PRESSURIZED.

REVERSE ; WHEN FACING SHAFT END OF MOTOR, SHAFT TO ROTATE CLOCKWISE WHEN PORT "B" IS PRESSURIZED. COUNTERCLOCKWISE WHEN PORT "A" IS PRESSURIZED.

2 MOUNTING FLANGE:
EA,EN = 4 BOLT MAGNETO: ø 82.6 [3.25] 3.0 [.12] PILOT, ø 13.59 [.535] MOUNTING HOLES ON ø 106.2 [4.18] B.C.

3 CASE DRAIN:
00 = NO CASE DRAIN

REVIEWED FOR CLASSIFICATION PER ESP-042

UNLESS OTHERWISE SPECIFIED ALL DIMENSIONS ARE IN INCHES ☐ MILLIMETERS [INCHES] ☒

TOLERANCES
X ± ----
XX ± ----
XXX ± ----
∠ ± ----

UNSPECIFIED RADII ARE ---

UNSPECIFIED DRAFT ANGLES ARE ---

DRAWING FORMAT CADD ☒ MANUAL ☐

DRAWING BASED ON ANSI Y14.5M-1982

THE REPRODUCTION, DISTRIBUTION, AND UTILIZATION OF THIS DOCUMENT, AS WELL AS THE COMMUNICATION OF ITS CONTENTS TO OTHERS WITHOUT EXPLICIT AUTHORIZATION IS PROHIBITED. OFFENDERS WILL BE HELD LIABLE FOR THE PAYMENT OF DAMAGES. ALL RIGHTS RESERVED IN THE EVENT OF THE GRANT OF A PATENT, UTILITY MODEL, OR DESIGN (PER ISO 16016).

Danfoss

DRAWN BY/DATE SMM 07-02-04
CHECKED BY/DATE AGJ 07-06-04
ENGRG BY/DATE JML 07-06-04
METALLURGY BY/DATE ----

THIRD ANGLE PROJECTION

DO NOT SCALE

MATERIAL/HEAT TREAT

TITLE
S MOTOR INSTALLATION

NUMBER
A-1470-005

SCALE 1/1 SHEET 1 OF 1